# Coherent Data Center Links

Jose Krause Perin, Anujit Shastri, and Joseph M. Kahn

*(Tutorial)*

***Abstract*—As link bit rates within and between data centers continue to increase, it is challenging to maintain low power consumption while accommodating ever-tighter optical link budgets. Although power consumption can be reduced by co-packaging optical transceivers with electrical switches and employing optical switching, both approaches increase losses, further compressing link budgets. Local oscillator-based coherent receivers traditionally employed for long-haul systems provide a path to higher bit rates and improved link budgets, but their power consumption is excessive owing to high-speed digital signal processing (DSP). We discuss alternative designs for coherent receivers, such as DSP-free coherent receivers and Kramers–Kronig (KK) receivers. We compare them in terms of receiver sensitivity, power consumption, and complexity.**

***Index Terms*—Coherent detection, data centers, differentially coherent detection, direct detection, Kramers–Kronig receiver, stokes vector receiver.**

## I. Introduction

SCALING the capacity of data center links has long relied on using multiple wavelengths or multiple fibers carrying conventional noncoherent formats such as on-off keying and, more recently, four-level pulse amplitude modulation (4-PAM). As these formats encode information only in signal intensity, increasing the data rate per wavelength becomes progressively more challenging as the symbol rate increases. Hence, further scaling the throughput per wavelength requires leveraging more degrees of freedom of the optical channel. Conventional coherent detection with polarization multiplexing and a strong local oscillator (LO) recovers phase and magnitude in each polarization, thus utilizing all four degrees of freedom of the optical channel, while maximizing optical power efficiency.

Coherent receivers are widely used in long-haul communications, but data center applications require redesigning those receivers to satisfy strict constraints on cost and power consumption. Research on coherent detection for data centers has sought to meet those goals by simplifying receiver signal processing or simplifying receiver optics.

On the simpler signal processing front, coherent receivers based on analog signal processing have been proposed to reduce the overall receiver cost and power consumption by avoiding power-hungry analog-to-digital converters (ADC) and digital signal processors (DSP). For example, Nambath *et al.* have demonstrated a coherent receiver that performs both polarization and carrier phase recovery using analog multipliers [1]. In [2], we proposed polarization recovery based on cascaded phase shifters, while carrier phase recovery is accomplished by a multiplier-free phase-locked loop (PLL). Morsy-Osman *et al.* [3] proposed phase-shifter-based polarization recovery, while avoiding carrier phase recovery by using the transmitter laser as the LO. Adaptive analog equalization has also been proposed [4] to make such DSP-free receivers more tolerant to chromatic dispersion (CD) or other linear filtering impairments.

On the simpler optics front, the class of Kramers-Kronig (KK) receivers proposed by Meccozzi *et al.* [5] has gained popularity. These receivers perform simple direct detection (requiring no LO or 90-degree optical hybrid) and digitally reconstruct the phase information for coherent detection from an intensity measurement. However, compared to conventional coherent detection, the KK receiver has some important drawbacks. First, without a strong LO, there is no amplification during optical-to-electrical downconversion, which substantially limits the receiver sensitivity in unamplified links. Moreover, the KK receiver requires a strong unmodulated carrier, which further hurts its power efficiency compared to conventional coherent detection. Furthermore, the overall KK system complexity may still be prohibitively high for data center applications [6]. In addition to the signal processing to recover the phase information, the required sampling rate is doubled and narrow optical filters are required. Many recent works have demonstrated high-bit-rate transmission using KK receivers, but these demonstrations have relied on optical amplifiers to improve the KK receiver's optical power efficiency.

This paper provides a review of detection methods for data center applications with emphasis on coherent detection. In Section II, we start by reviewing optical detection methods in the context of data center networks and discuss their advantages and drawbacks. In Section III, we review typical implementations of the most promising detection techniques and present results on receiver sensitivity for non-amplified links and required optical signal noise rate (OSNR) for amplified links. In Section IV, we discuss the overall complexity of these different methods. In Section V, we conclude the paper.

## II. Optical Detection Methods

Table I summarizes optical detection methods and considers LO-based and LO-free downconversion. Although some of the

Manuscript received August 1, 2020; revised November 13, 2020; accepted December 3, 2020. Date of publication December 10, 2020; date of current version February 2, 2021. This work was supported by the Maxim Integrated and National Science Foundation under Grant ECCS-1740291 E2CDA. *(Corresponding author: Jose Krause Perin.)*

The authors are with the Edward L. Ginzton Laboratory, Department of Electrical Engineering, Stanford University, Stanford, CA 94305 USA (e-mail: jkperin@alumni.stanford.edu; anujit@alumni.stanford.edu; jmk@ee.stanford.edu).

Color versions of one or more figures in this article are available at https://doi.org/10.1109/JLT.2020.3043951.

Digital Object Identifier 10.1109/JLT.2020.3043951

TABLE I
DOWNCONVERSION AND DETECTION METHODS

| Detection method | Noncoherent | Differentially coherent | Hybrid noncoherent/differentially coherent | Coherent |
|---|---|---|---|---|
| **Measures** | Energies in signal dimensions | Phase difference between signal dimensions | Energies and phase differences | Field quadratures in signal dimensions |
| **Typical modulation methods** | OOK, PAM, OFDM, DMT, FBMC, WD-FSK | DPSK, CPFSK | PolSK | QAM, PSK, OFDM |
| **Signal dimensions in two polarizations** | Typically 2 | Typically 2 | Up to 4 | Up to 4 |
| **Using LO-free downconversion** | Direct detection | Delay interferometer + direct detection | Stokes vector detection | Kramers-Kronig detection |
| **Using LO-based downconversion** | Envelope detection | Delay-and-multiply detection | PolSK detection | Synchronous detection |

Acronyms: On-off keying (OOK), pulse-amplitude modulation (PAM), orthogonal frequency-division multiplexing (OFDM), discrete multitone (DMT), frequency bank multicarrier (FBMC), wide-deviation frequency shift keying (WD-FSK), phase shift keying (PSK), differential PSK (DSPK), continuous phase frequency shift keying (CPFSK), polarization shift keying (PolSK), quadrature amplitude modulation (QAM).

alternatives presented do not appear to be practically compelling (e.g., noncoherent detection with LO), they are included for completeness. The most promising techniques are discussed in Section III.

The primary goal of an optical receiver is to recover the transmitted information from noisy signals. To that end, the receiver extracts decision variables from these noisy signals, which should contain sufficient statistics to allow for optimal detection of the transmitted information. Fundamentally, the detection methods differ on what are the underlying decision variables and how they are measured from the received noisy signals. For example, in noncoherent detection, the decision variable is derived from a measurement of signal energy. For differentially coherent detection, the decision variables are extracted from measurements of differential phase between the symbol of interest and one or more reference symbol(s). It is also possible to create a hybrid between noncoherent and differentially coherent methods, whereby the decision variables are extracted from signal energy as well as phase difference between signal dimensions. In coherent detection, the decision variables are the electric field quadratures in each polarization, which can be measured after homodyne (or heterodyne) downconversion or estimated from an intensity measurement, in the case of KK detection. An in-depth review of detection methods is given in [7].

Noncoherent detection in the form of direct detection has been commercially deployed since the early days of optical communications. Differentially coherent in the form of delay interferometer and direct detection was successfully deployed in long-haul communications until coherent detection (synchronous detection) leveraging powerful DSP became the workhorse for long-haul communication systems.

Recent research on data centers has focused primarily on Stokes vector receiver (SVR) [8]–[11] and coherent detection either in the form of KK detection [5] or synchronous detection using DSP-free receivers [1]–[3]. These techniques provide higher spectral efficiency by leveraging more degrees of freedom of the optical channel. In fact, by inspecting the row "signal dimensions in two polarizations" listed in Table I for each detection method, it is evident that only hybrid noncoherent/differentially coherent and coherent detection can exploit all four degrees of freedom of the optical channel.

### *A. LO-Free vs LO-Based Downconversion*

An important distinction between KK (and SVR) detection and traditional coherent detection is the downconversion method. Traditional coherent detection employs homodyne LO-based downconversion, whereby the received signal is mixed with a LO laser whose frequency is approximately equal to the transmitter laser frequency. Note that heterodyne downconversion, whereby the LO and transmitter laser frequencies differ by an intermediate frequency, achieves the same performance as homodyne downconversion in most practical scenarios [7], but requires higher receiver bandwidth, since the downconverted signal is centered around an intermediate frequency. As a result, for the remainder of this paper we focus only on homodyne downconversion. On the other hand, KK and SVR do not necessarily require a LO laser for downconversion, thereby simplifying the receiver optics. LO-based KK receivers are

also feasible, and are discussed in Section III-E. Using an LO with KK, however, significantly weakens the argument that KK receivers have lower complexity than traditional coherent receivers.

Although an LO increases the receiver complexity, LO-based downconversion offers two key advantages compared to LO-free downconversion. First, the LO amplification gain can boost receiver sensitivity by up to 20 dB in unamplified links [12]. This gain is not critical in amplified links, where the receiver is limited by amplified spontaneous emission (ASE) noise rather than shot noise. Second, the LO provides an absolute phase reference, allowing for full recovery of amplitude and phase components of the electric field. Hence, the receiver can electronically compensate for linear filtering impairments such as CD or polarization-mode dispersion (PMD) [13]. In the case of WDM systems, full recovery of electric field also allows for selecting the desired channel by electric filtering after downconversion. LO-free systems must select a desired channel by optical filtering before donwconversion.

Consequently, traditional LO-based coherent detection offers substantially improved receiver sensitivity when compared to KK and SVR receivers. In fact, high-speed demonstrations of KK and SVR techniques have relied on optical amplification to mitigate these power efficiency shortcomings. To compensate for CD or other linear impairments, KK and SVR require transmission of a strong unmodulated carrier, which further hurts their optical power efficiency. In the case of KK receivers, the strong unmodulated carrier is also necessary to satisfy the minimum-phase condition, which is necessary to allow the phase to be uniquely reconstructed. As the LO laser provides an absolute phase reference in traditional coherent detection, the strong unmodulated carrier plays an analogous role in the KK receiver. Without it, the signal would no longer satisfy the minimum-phase condition and consequently its phase could not be uniquely recovered [5]. It is important to note an key difference between the unmodulated carrier and the LO: the strong unmodulated carrier hurts receiver sensitivity, while the strong LO substantially improves it.

The utilization of a strong LO may also have important benefits for data center links. At the shortest distances in intra-data center applications ($<10$ km), where optical links are likely to remain unamplified, the LO gain could improve receiver sensitivity by 13 dB compared to 4-PAM while doubling bit rate [2]. This boost in receiver sensitivity would permit eye-safe links to support more wavelengths per fiber as well as higher-order modulation formats, potentially yielding a large increase in throughput per fiber. Moreover, higher receiver sensitivity would accommodate higher losses due to propagation over longer distances (30 km in the O-band results in $\sim 10$ dB of attenuation) or due to high-insertion-loss components such as optical switches.

### B. Impact of Co-Packaged Optics

Unlike pluggable transceivers, co-packaged systems place optical and electronic interfaces inside data center switches, which can reduce overall system power consumption and support higher density. An important challenge for co-packaged architectures is that temperature-sensitive optical components, such as lasers and wavelength multiplexers/demultiplexers, are placed near heat sources such as switching cores.

Employing light sources external to the switch can obviate the need to place lasers in the harsh thermal environment, albeit at the cost of higher losses and more fiber attachments. Introducing external light sources in co-packaged systems may substantially facilitate LO-based coherent detection, as sources with low phase noise and accurately controlled frequency can be used as both transmitter and LO for one or more optical transceivers, amortizing their cost.

LO-based coherent detection also provides an opportunity to overcome the temperature sensitivity of optical demultiplexers [14]. LO-free downconversion requires a narrow optical demultiplexer to select the desired channel and minimize crosstalk from neighboring channels. In LO-based downconversion, the optical demultiplexer can be coarse since the desired WDM channel can be selected after downconversion via electrical filtering, thus eliminating the need of temperature-insensitive (athermal) demultiplexers in systems using dense WDM [14].

## III. Typical Embodiments

This section details typical implementations of the detection techniques discussed in Section II such as direct detection, differentially coherent detection, traditional LO-based coherent detection, and LO-free KK coherent detection.

### A. Direct Detection

Nohcoherent detection of OOK has been traditionally used in data center links, given its low cost and high receiver sensitivity. As the demand for throughput outgrew what can be comfortably transmitted using OOK, 4-PAM emerged as a natural replacement. Orthogonal frequency division multiplexing (OFDM) variants have also been extensively studied for data center applications [16], [17].

Fig. 1 compares the performance of 4-PAM and OFDM variants vs. dispersion for unamplified direct detection systems. The dispersion axis may be interpreted as total CD in intra-data center links, or residual CD after optical CD compensation in inter-data center links. These results were obtained through Monte-Carlo simulations using the models and parameters described in [15].

For unamplified systems based on positive-intrinsic-negative (PIN) photodiodes or avalanche photodiodes (APDs), we characterize the performance in terms of the receiver sensitivity Fig. 1a, defined as the average optical power required to achieve the target BER given by the forward error correction (FEC) code threshold. In amplified systems, using either by semiconductor optical amplifiers (SOAs) or erbium-doped fiber amplifiers (EDFAs), it is more appropriate to characterize the performance in terms of the required OSNR Fig. 1b.

4-PAM outperforms the OFDM candidates in both scenarios. We considered DC-bias OFDM and asymmetrically clipped optical (ACO) OFDM. These techniques differ in how they meet the non-negativity constraint imposed by the intensity-modulated optical channel. In DC-OFDM, a large DC bias is added to minimize clipping, thus incurring a large power

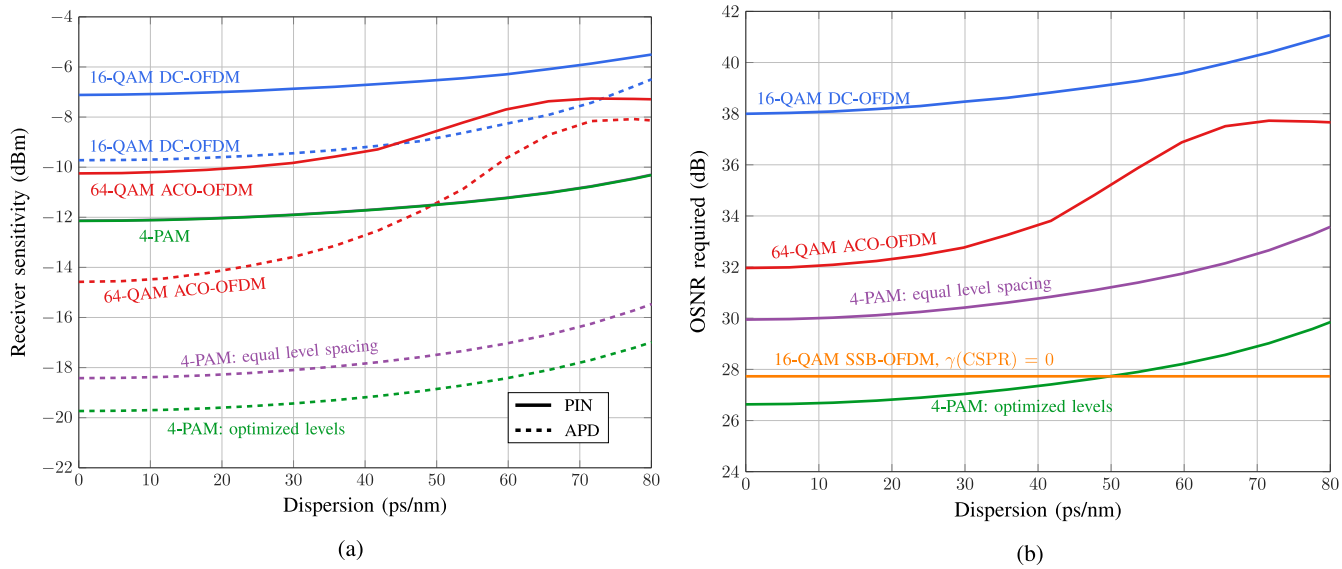


Fig. 1. Comparison of performance of noncoherent techniques vs. chromatic dispersion at 112 Gbit/s. Unamplified systems based on PIN photodiodes or APD are characterized in terms receiver sensitivity (a), while amplified systems are characterized in terms of OSNR required (b). The $x$-axis may be interpreted as total dispersion in intra-data center links or residual dispersion after optical CD compensation in inter-data center links. All curves assume a weak FEC such as RS(255, 239), which has a input BER threshold of $1.8 \times 10^{-4}$. Adapted from [15].

penalty. In ACO-OFDM only the odd sub-carriers are modulated and no bias is added. The signal is clipped around its mean, and the distortion resulting from clipping only falls on the even subcarriers [18], which purposely do not carry data. Hence, ACO-OFDM is more power efficient, but it requires prohibitively high bandwidth as only half of the subcarriers are used.

An APD-based receiver for 4-PAM has nearly 4 dB better sensitivity than the PIN-based receiver. The APD gain is optimized following the procedure in [19], and is approximately 11 dB. Level spacing optimization improves the receiver sensitivity by roughly 1 dB for APD-based receivers Fig. 1a, while in amplified systems Fig. 1b, it results in $\sim$ 3-dB OSNR improvement.

Fig. 1 shows that after roughly 50 ps/nm of dispersion, the penalty due to CD increases significantly. This penalty poses a limit in the reach of intra-data center links and restricts the maximum residual dispersion after optical CD compensation in inter-data center links. CD mitigation through linear equalization is only effective when CD is small. Several techniques have been proposed to extend the uncompensated reach. Perhaps the most effective is electronic pre-compensation [20], [21], whereby the transmitted signal is filtered by the inverse of the fiber frequency response $H_{CD}^{-1}(f) = \exp(0.5j\beta_2(2\pi f)^2 L)$, where $\beta_2 = -(\lambda/2\pi c)D$, $D$ is the dispersion parameter, and $\lambda$ is the transmission wavelength. In theory, this pre-filtering can compensate any amount of CD, which must be known at the transmitter. Nevertheless, pre-compensation comes at the cost of requiring an I-Q modulator at the transmitter as well as doubling the signal generation and modulator driver circuitry.

Chirp-managed modulators or line coding techniques such as duobinary 4-PAM [22] or Tomlinson-Harashima precoding [23] are less effective, since they do not avoid the power fading due to CD in IM-DD channels. In [24], Tomlinson-Harashima precoding was used in conjunction with distributed feedback equalizers (DFEs) to compensate CD-induced power fading. Tomlinson-Harashima precoding mitigates the error propagation penalty in DFEs, which allows transmission of 56 Gbaud 4-PAM up to 50 km using soft-decision FEC and required OSNR of 38 dB.

Vestigial-sideband (VSB) modulation has been proposed to allow uncompensated transmission of 4-PAM over 80 km [25]. In VSB, the intensity-modulated 4-PAM is generated as usual, but the negative sideband is suppressed by an optical filter. The transmitter laser and the optical filter must have fine wavelength stabilization in order to ensure filtering of the correct signal band. Single-sideband (SSB) modulation has generally better performance than VSB modulation, but comes at the cost of more complex DSP and requires two DACs, two drivers, and an I&Q modulator. Moreover, receiver-side DSP must mitigate the undesirable signal-signal beat interference (SSBI) for either SSB or VSB modulation. A detailed comparison of SSB and VSB for OFDM is presented in [26].

### B. Differentially Coherent Detection

Differentially coherent detection is performed in practice by estimating the phase difference between two or more consecutive symbols. This precludes the need of an absolute phase reference, and hence carrier phase recovery is not necessary. Differential detection, however, has two main disadvantages compared to coherent detection. First, for the same spectral efficiency, differential detection has an inherent SNR penalty, e.g., about 2.4 dB for DQPSK compared to QPSK [2]. Second, differential detection restricts modulation to PSK formats.

The estimation of the phase difference between two consecutive symbols may be realized in the optical domain by

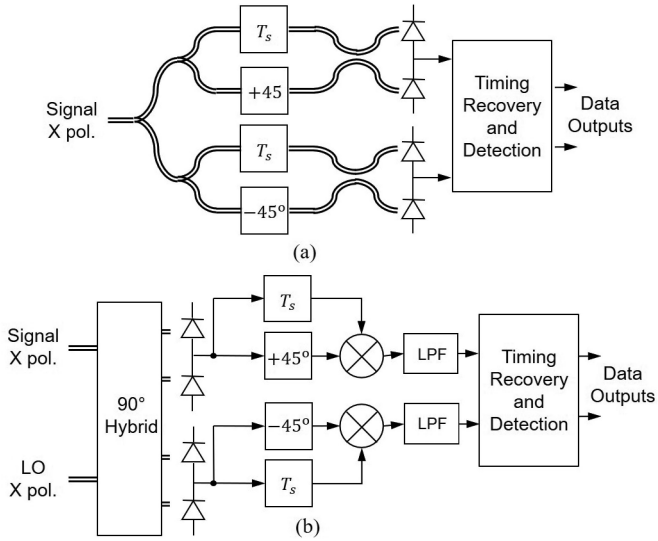


Fig. 2. Block diagrams of differentially coherent detection methods (a) without LO and (b) with LO. Only X polarization is shown in the diagrams, and $T_s$ denotes the symbol period. Adapted from [15].

using delay interferometers, as illustrated in Fig. 2(a). This configuration does not require an LO laser, and the receiver electronics only needs to perform timing recovery and detection. The delay caused by the delay interferometer is sensitive to the wavelength. As a result, the transmitter laser's frequency drifts can cause a penalty if not properly compensated by tuning the delay interferometer [27]. For DP-DQPSK, at 224 Gbit/s without delay interferometer tuning, a frequency drift of $\pm 800$ MHz would incur a 2-dB penalty.

Differential detection may also be performed in the electrical domain with an LO laser. Fig. 2 b shows one implementation of differentially coherent detection, whereby the phase difference between two symbols is realized in the electrical domain. This alternative shares the same advantages other LO-based detection methods, namely substantially improved receiver sensitivity and electronic CD compensation. However, a large frequency offset between LO and transmitter laser degrades performance unless the architecture is modified to perform frequency recovery. The BER of homodyne $M$-DPSK in the presence of frequency error is studied in [28]. As shown in [2], a 2-GHz frequency offset between transmitter and LO laser incurs nearly 3-dB SNR penalty.

The diagrams of Fig. 2 only show one polarization and assume that polarization demultiplexing already has been performed. Similarly to the DSP-free coherent methods discussed in Section III-D, polarization recovery can be performed using cascaded phase shifters. One method of controlling these phase shifters is to minimize the radio frequency (RF) power spectral density of the optical signal after the final phase shifter [29].

Fig. 3 shows the performance of homodyne DQPSK without frequency error. In unamplified systems (Fig. 3 a), the LO laser provides sufficient gain that differential detection incurs only a small penalty relative to coherent detection. This penalty of differential detection relative to coherent detection is also evident in amplified systems (Fig. 3 b). DQPSK without an LO has significantly poorer receiver sensitivity in unamplified systems, such as intra-data center links. However, the OSNR required in amplified systems remains approximately the same as that of a LO-based DQPSK receiver.

### C. DSP-Based LO-Based Coherent Detection

Coherent detection based on high-speed DSP is a mature technology in long-haul systems, but it may be currently unsuitable for data center links, where cost and power consumption are paramount. DSP-based coherent solutions may eventually become viable for short-reach applications by leveraging more power-efficient complementary metal-oxide-semiconductor (CMOS) processes and optimizing DSP architectures for short-reach applications, where fiber impairments are less severe.

Fig. 4 shows a typical implementation of a dual-polarization DSP-based coherent receiver. The incoming signal is split and combined with orthogonal polarizations of the LO laser in two independent $90^\circ$ hybrids. After balanced photodetection, transimpedance amplifiers (TIAs) with automatic gain control (AGC), and low-pass filtering (LPF) to minimize noise and aliasing, the four outputs are sampled by high-speed ADCs. The DSP stage performs functions such as polarization demultiplexing, PMD compensation, CD compensation, carrier recovery and clock recovery. Some implementations place the DSP chip on the line card itself with an analog interface to the pluggable transceivers, which are referred to as analog coherent optics. While this can increase transceiver port density, it essentially offloads the power consumption to elsewhere in the system.

The power consumption of the various operations performed by the receiver was extensively studied in [30]. The most power-hungry operations are CD equalization and polarization demultiplexing with PMD compensation, which together amount to roughly 55% of the receiver power consumption [30].

Short-reach links in data centers are subject to lower CD and negligible PMD, hence both CD and PMD filters can be simplified. As discussed in [2], in the small CD regime ($<200$ ps/nm), the $2 \times 2$ MIMO equalizer responsible for PMD compensation and polarization demultiplexing can also perform CD compensation, thus avoiding dedicated CD compensation filters. Moreover, if the mean differential group delay (DGD) between the two polarizations is much smaller than the sampling rate, the polarizations will appear syncronized at the receiver. As a result, the cross-polarization filters in the $2 \times 2$ MIMO equalizer can be replaced by simple scaling factors, thus halving the number of operations performed by the filter. Assuming a sampling rate of 70 GS/s (oversampling ratio of $5/4$ at 56 Gbaud), and PMD of 0.1 ps/$\sqrt{\text{km}}$, the small-DGD approximation holds up to $\sim 200$ km. Filter coefficient update equations using either least-mean squares (LMS) or constant-modulus amplitude (CMA) algorithms are given in [2, Appendix 2].

To simplify the complexity of the CD equalizers, Martins *et al.* [31] have proposed a distributive finite-impulse response (FIR) equalizer that sharply reduces the number of required operations. Due to quantization of the filter coefficients, many filter taps share the same coefficient value. These taps with same coefficient can be combined into a single multiplier. Compared to a conventional frequency-domain CD equalizer, their

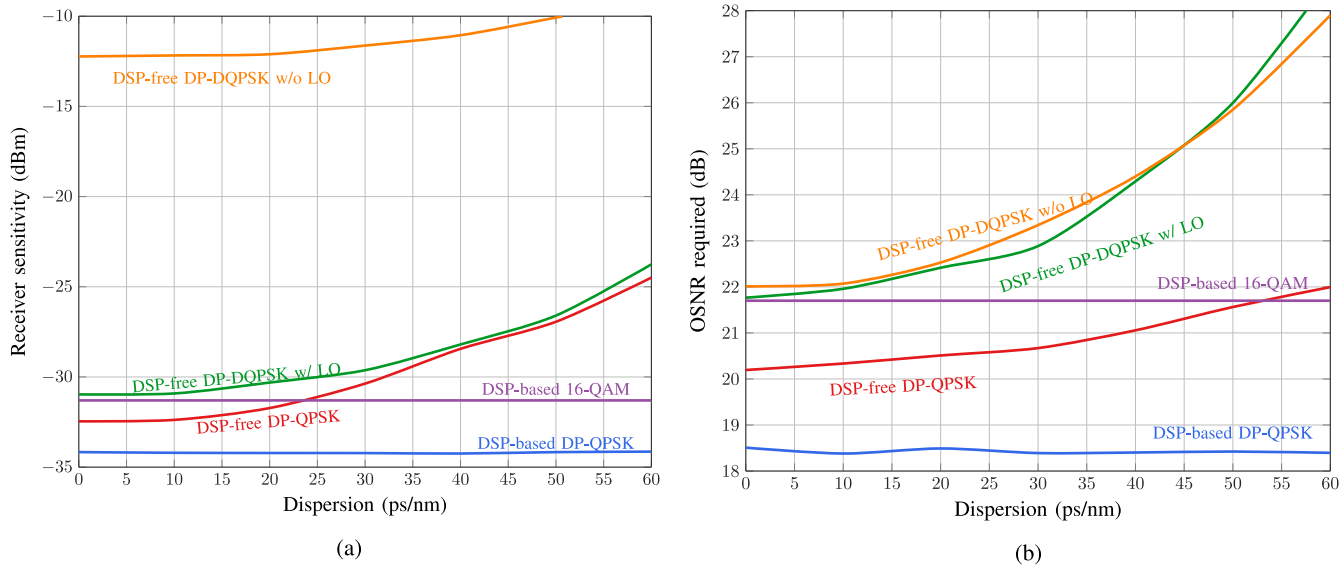


Fig. 3. Comparison of performance of coherent detection schemes vs. dispersion at 224 Gbit/s. Unamplified systems are characterized in terms of (a) receiver sensitivity, while amplified systems are characterized in terms of (b) OSNR required. The x-axis may be interpreted as total dispersion in intra-data center links or residual dispersion after optical CD compensation in inter-data center links. All curves assume a weak FEC such as RS(255, 239), which has a input BER threshold of $1.8 \times 10^{-4}$. Adapted from [15].

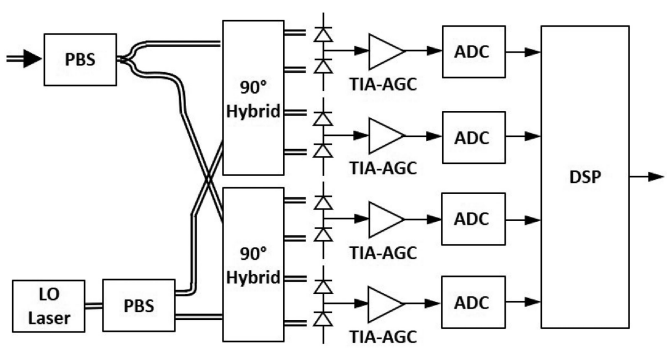


Fig. 4. Block diagram of a DSP-based coherent receiver. Acronyms: local oscillator (LO), transimpedance amplifier (TIA), automatic gain control (AGC), analog-to-digital converter (ADC), digital signal processor (DSP). Adapted from [15].

distributive FIR equalizer requires 99% fewer multiplications and 30% fewer additions [31].

### *D. DSP-Free LO-Based Coherent Detection*

Coherent detection using analog signal processing was studied extensively in the 1980 s and early 1990s [32], but the advent of the EDFA and later DSP-based coherent detection diminished its popularity.

A coherent receiver must perform three basic operations: polarization demultiplexing, carrier recovery, and timing recovery. In traditional long-haul coherent receivers all these operations have been performed digitally. Fig. 5 shows an example of how to realize these operations without DSP [2].

Polarization demultiplexing is performed by optical phase shifters that are controlled by low-speed circuitry. Other receiver operations such as carrier recovery, timing recovery and detection are performed in the high-speed analog electronics stage. Timing recovery and detection may be realized using conventional clock and data recovery (CDR) techniques [33]; thus, we do not discuss them further herein.

The polarization controller, shown in the inset in Fig. 5, must recover the transmitted state of polarization by inverting the fiber Jones matrix. Three cascaded phase shifter pairs can perform any arbitrary polarization rotation [34]. In the inset, the variables $\phi_0, \theta$, and $\phi_1$ indicate the amounts of differential phase shifts in the phase shifters. One way to control these variables is to transmit a marker tone in one quadrature of one polarization and minimize its presence in the other quadrature and polarization at the receiver. We have demonstrated compensation of up to 700 rd/s of polarization rotation in Monte Carlo simulations [2]. Faster tracking speeds can be obtained by using larger angle changes in the phase shifters, resulting in slightly higher average polarization compensation error, a tradeoff that can be optimized. This method can be used for QPSK, as well as for 16-QAM and higher-order formats. The phase shifters can be fabricated in silica, lithium niobate or any other material that has low loss and allows integration of a sequence of phase shifters. These can have very low loss, especially if thermal phase shifters are used. Because the polarization demultiplexing process is performed through phase shifts and coupling, the underlying waveguides do not need to support two polarizations. Endless polarization control can be achieved by cascading more phase shifting sections or using an electro-optic material such as lithium niobate for phase shifters and resetting them fast enough to allow interleaving and FEC to correct the burst errors. As polarization rotation through data center fibers varies slowly with time (typically on a millisecond time scale) [35], the polarization signal processing in Fig. 5 can be implemented with low-speed electronic microcontrollers.

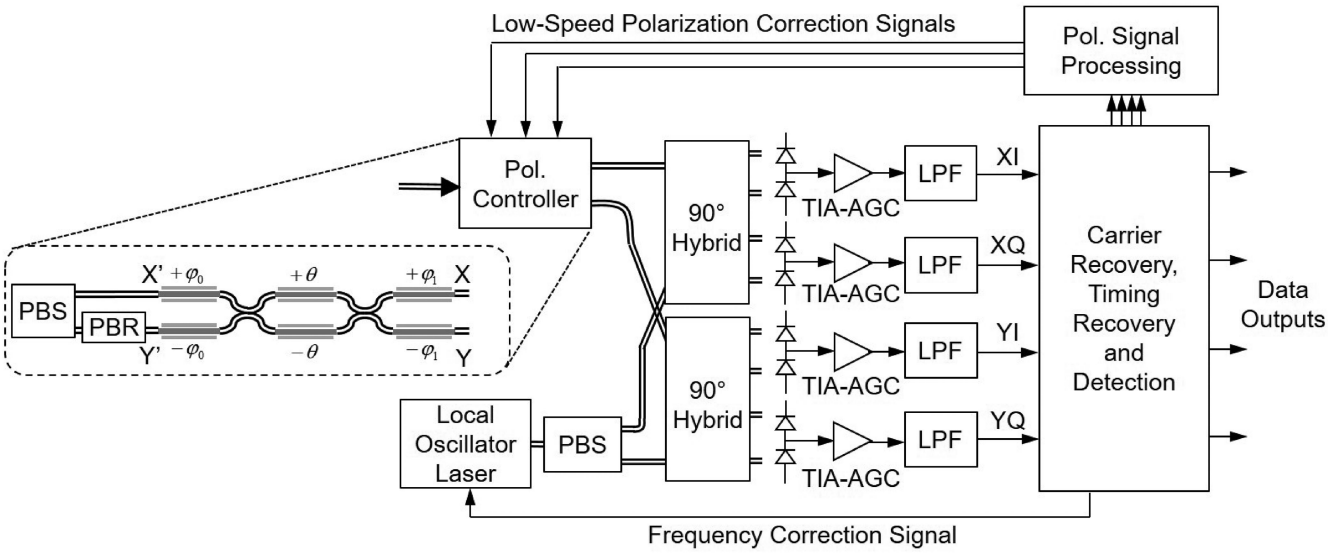


Fig. 5. Block diagram of coherent receiver architectures based on analog signal processing. Acronyms: local oscillator (LO), polarization beam splitter (PBS), polarization beam rotator (PBR), transimpedance amplifier (TIA), automatic gain control (AGC), low-pass filter (LPF). Adapted from [15].

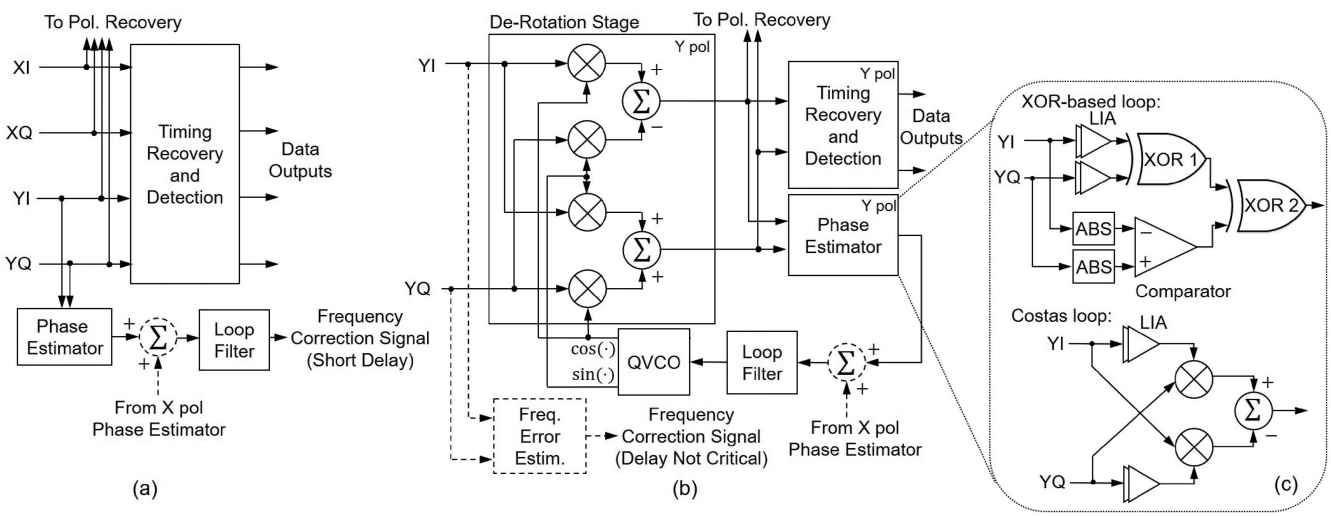


Fig. 6. Block diagrams of carrier recovery for an analog coherent receiver based on analog (a) OPLL and (b) EPLL (shown for one polarization only). The phase estimator block is detailed in (c), where LIA denotes limiting amplifiers, and ABS denotes full-wave rectifiers. Adapted from [15].

Carrier recovery is based on a phase-locked loop (PLL). The high-speed analog electronics stage is detailed in Fig. 6 for carrier recovery based on optical PLL (OPLL) and electrical PLL (EPLL).

In an OPLL (Fig. 6 a), the LO laser is frequency-modulated by the frequency correction signal generated by the CR stage. Hence, an OPLL requires a LO laser with wideband frequency modulation (FM) response and short propagation delay along the entire optical and electrical path around the loop and back to the LO FM input. Minimizing the loop delay is one of the main challenges in OPLL design, since the loop includes the LO laser, 90° hybrid, photodiodes, and all the subsequent electronics in carrier recovery, which may not be realized within the same chip. Notably, Park *et al.* have demonstrated loop delays of only 120 ps for a highly integrated 40 Gbit/s binary PSK coherent receiver [36].

An EPLL (Fig. 6 b) implementation eliminates requirements on LO laser FM response and on propagation delay at the cost of more complex analog electronics. Specifically, an EPLL requires a SSB mixer in each polarization to de-rotate the incoming signals (see Fig. 6 b), since the transmitter and LO lasers are not phase locked. Additionally, the frequency offset between the transmitter and LO lasers must always be within the lock-in and hold-in ranges of the EPLL, which are practically limited by the voltage-controlled oscillator (VCO) frequency range (typically up to 10 GHz). Meeting this constraint by precise temperature

control of individual transmitter and LO lasers, as in long-haul systems, may be too costly and power-hungry for data centers. A more cost- and power-efficient approach is to share external light sources among multiple transceivers, thus amortizing their cost. Alternatively, provided the channel spacing is sufficiently large, the LO laser frequency may be actively tuned by a frequency error estimation stage based on relatively simple frequency discriminator circuit [37].

Other examples of DSP-free coherent receivers differ on how they accomplish polarization recovery and carrier phase recovery. For example, in [38] all the receiver operations are performed with analog electronics. Polarization recovery is done by a $2 \times 2$ multiplier chain, and carrier recovery is done using a multiplier-based Costas loop. In the "coherent lite" concept proposed by Morsy-Osman *et al.* [3], polarization recovery is also accomplished optically with phase shifters, but carrier phase recovery is avoided by mixing the receiver signal with a copy of the transmit laser, which is delivered to the receiver via a separate fiber. Since the signal and reference are derived from the same laser source, phase recovery can be eliminated as long as the two signals are synchronized within coherence time of phase noise. However, requiring an extra fiber may not be practical, since the additional fiber could be used for transmitting data and thus doubling throughput.

Fig. 3 shows the performance of various coherent and differentially coherent systems as a function of dispersion (or residual dispersion after optical dispersion compensation). The performance shown in Fig. 3 for DSP-based coherent receivers is independent of dispersion, as CD is compensated effectively by digital equalization. DSP-based coherent detection systems can use higher-order modulation, such as 16-QAM, to reduce the bandwidth required of eletro-optic components. At small dispersion ($<$ 30 ps/nm), there is roughly a 1.6 dB gap between DSP-based and DSP-free DP-QPSK receivers. This penalty is due to imperfect receiver filtering. While the DSP-based digital adaptive equalizer converges to the optimal matched filter and achieves near-optimal performance, the DSP-free receiver uses a fixed low-pass filter, in this case fifth-order Bessel filter with noise bandwidth of 40.7 GHz.

As dispersion increases, the receiver sensitivity decreases or OSNR required increases sharply, since the receiver does not equalize CD. Nonetheless, the sensitivity would allow unamplified eye-safe systems near 1310 nm to achieve a reach up to 40 km. In fact, systems with 100 GHz wavelength spacing could support 49 channels with 5 dB of margin, and systems with 200 GHz wavelength spacing could support 25 channels with 8 dB of margin.

The performance gap between DSP-free and DSP-based receivers can be reduced by leveraging analog equalization as proposed in [4]. This equalization is realized by using the constant modulus algorithm for blind adaptation of the coefficients of a $4 \times 4$ two-tap finite-impulse response filter realized in 130 nm SiGe BiCMOS technology. Although all-analog equalization does not offer the same flexibility or near-optimal performance of digital equalization, it requires substantially lower power since all the operations are still performed in the analog domain, thus avoiding high-speed ADCs and DSP.

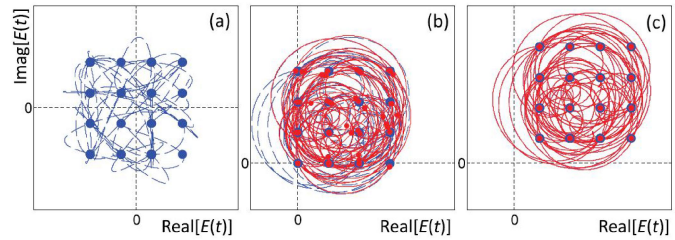


Fig. 7. 16-QAM signal becoming minimum-phase by increasing the carrier component. Adapted from [5].

### *E. Kramers-Kronig Coherent Detection*

KK detection simplifies the optics of a coherent receiver by eliminating the need for a LO laser and 90-degree optical hybrid. The KK receiver performs simple direct detection and digitally recovers the electric field quadratures from a signal intensity measurement [5]. Consider a complex data-carrying band-limited signal $s(t) = |s(t)|e^{j\phi(t)}$ whose spectrum is contained between $-B/2$ and $B/2$. We can construct a SSB form of $s(t)$ such that

$$E(t) = E_0 + s(t)\exp(-j\pi Bt), \tag{1}$$

where $E_0$ is a constant corresponding to an unmodulated carrier.

Given the photocurrent after direct detection $i(t) = |E(t)|^2$, where we omit the photodiode responsivity for simplicity. The signal $s(t)$ can be reconstructed as follows:

$$s(t) = \left(\sqrt{i(t)}\exp(j\phi(t)) - E_0\right)\exp(j\pi Bt), \tag{2}$$

where the signal phase $\phi(t)$ is given by

$$\phi(t) = \mathcal{H}\{\log i(t)\}, \tag{3}$$

where $\mathcal{H}\{\cdot\}$ denotes the Hilbert transform.

However, the phase $\phi(t)$ can only be uniquely recovered as long as the signal $E(t)$ satisfies a minimum-phase condition [5]. A necessary and sufficient condition for minimum phase is that the time-domain trajectory of $E(t)$ does not encircle the origin. As shown in Fig. 7, not only must the signal constellation points occupy a bounded region away from the origin, the waveform transitioning between them must also not encircle the origin. In order to satisfy this condition, it is necessary and sufficient to have $|E_0| > |s(t)|$, i.e., the unmodulated carrier component must be sufficiently strong [5]. Additionally, because the intensity waveform is sampled instead of the electric field, the minimum sampling rate must be twice the bandwidth of the optical signal.

In most embodiments of KK detection, a carrier component is added at the transmitter sufficient to ensure the received signal satisfies the minimum-phase condition. An alternative is to add the carrier component at the receiver, combining the received signal with a LO frequency-aligned to the left band edge of the information-bearing signal spectrum [5]. Multiplexing data on two polarizations is an attractive method for doubling the bit rate of future links, as doubling the baud rate is difficult. While for single-polarization signals, increasing the carrier component at the transmitter can ensure that a received signal is

TABLE II
KRAMERS-KRONIG EXPERIMENTAL DEMONSTRATIONS

| Experiment | Net bit rate per wavelength (Gb/s) | Reach (km) | Modulation type | Number of polarizations |
|---|---|---|---|---|
| [39] | 400 | 160 | 16-QAM | 2 |
| [40] | 279 | 100 | DMT | 1 |
| [6] | 267 | 300 | 16-QAM | 1 |
| [41] | 240 | 100 | Hybrid | 2 |
| [42] | 220 | 80 | 16-QAM | 1 |
| [43] | 168 | 80 | 64-QAM | 1 |
| [44] | 112 | 80 | 4-PAM | 1 |
| [45] | 102 | 1200 | 4-PAM | 1 |

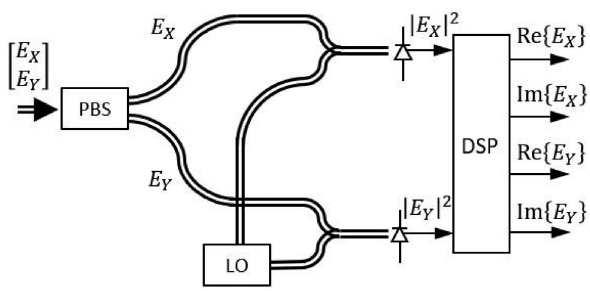


Fig. 8. Dual-polarization KK receiver architecture using a PBS and LO. Optical couplers combine the signals in each polarization with the LO, ensuring that the signals at the photodiodes are minimum-phase.

minimum-phase, this method is not effective for polarization-multiplexed signals. Even if the two multiplexed data signals are individually minimum-phase, after propagating through a fiber described by an arbitrary unitary Jones matrix, the signals received on two arbitrary orthogonal polarizations are generally no longer. As a consequence, if one splits the received signal into arbitrary orthogonal components using a PBS and detects them separately using KK receivers, it is not possible to recover the transmitted data. One solution, as shown in Fig. 8, is to mix the two outputs of the PBS with a frequency-aligned LO, ensuring that both signals are minimum-phase. However, the addition of a LO at the receiver significantly compromises the receiver architecture simplification that KK promises. A proposed option to reduce complexity is to tap part of the transmitter laser optical power to use for the LO in a bidirectional link, but this same approach could be used to enable a conventional LO-based coherent receiver, which offers important advantages over the KK receiver. An alternative approach enabling dual-polarization KK reception without an LO would involve employ an optical polarization controller at the receiver. The use of marker tones could enable complete demultiplexing by the polarization controller, or sufficient demultiplexing to ensure that the signal on each of the two polarizations is minimum-phase, with additional demultiplexing being performed in DSP after phase retrieval.

Table II summarizes recent experimental demonstrations of KK transmission schemes. The achieved distances generally fall within the amplified inter-data center links range of about 100 km, making the KK receiver an option for this application. With per-wavelength, per-polarization bit rates demonstrated between 200 Gb/s and 300 Gb/s, KK receivers have demonstrated the ability to meet the data rate and reach requirements for current generation inter-data center links. However, with the number of fibers for these links being critical, it is necessary to transmit on both polarizations to be a suitable solution. For dual-polarization demonstrations [39] [41], a frequency-aligned local oscillator signal at the receiver was required, which greatly diminishes the complexity advantage of KK versus conventional coherent links for inter-data center applications.

The complexity of the KK receiver was studied by Fullner, *et al.* [6], in which they were able to experimentally demonstrate single-wavelength KK transmission at 267 Gb/s over 300 km of SSMF by using 33 FIR filter taps, which can be realized in hardware using 8 filter taps due to zero-value coefficients and symmetry. There is a significant performance penalty when they compare KK transmission to coherent transmission using an intradyne receiver. While this relatively low-complexity implementation simplifies receiver DSP, the stringent requirements of optical filters necessary for KK transmission make the complexity advantages versus coherent transmission less attractive.

The KK receiver enables coherent transmission without requiring a LO, significantly reducing the complexity of receiver optics. However, the additional optical power of transmitting a carrier signal along with data significantly reduces reach. Higher sampling rates, along with strict optical filter requirements, further increase the complexity of the receiver.

## IV. COMPLEXITY AND POWER CONSUMPTION CONSIDERATIONS

Section III compared the performance of the various detection methods and modulation formats in terms of receiver sensitivity and OSNR required. This section focuses on the overall complexity of these schemes.

Table III summarizes the main complexity differences between the various schemes discussed in this paper. This comparison covers the number of degrees of freedom (DoF), spectral efficiency, modulator type, complexity of the optical receiver,

TABLE III
COMPLEXITY COMPARISON. ACRONYMS: DEGREES OF FREEDOM (DOF), SPECTRAL EFFICIENCY (SE), ANALOG-TO-DIGITAL CONVERTER (ADC), CHROMATIC DISPERSION (CD), DIGITAL SIGNAL PROCESSING (DSP), PULSE-AMPLITUDE MODULATION (PAM), DUAL-POLARIZATION (DP), QUADRATURE AMPLITUDE MODULATION (QAM), KRAMERS-KRONIG (KK), INTENSITY MODULATION (IM), 90-DEGREE OPTICAL HYBRID (OH), PHOTODIODE (PD), TIME-DOMAIN EQUALIZER (TD-EQ), MULTIPLE-INPUT MULTIPLE OUTPUT (MIMO), CARRIER RECOVERY (CR), SINGLE-SIDE BAND (SSB) AND KRAMERS–KRONIG-PHASE ESTIMATION (KK-PE)

| Scheme | DoF | SE (b/s/Hz) | Mod. type | LO | Optical receiver | # High-speed ADCs | CD compensation | High-speed DSP operations |
|---|---|---|---|---|---|---|---|---|
| 4-PAM | 1 | 2 | IM | No | 1 PD | 1 | Very low | TD-EQ |
| DSP-based DP-QPSK | 4 | 4 | DP I&Q | Yes | $2 \times 90°$ OH, 4 PD | 4 | High | EQ, $2 \times 2$ MIMO, CR |
| DSP-based DP-16-QAM | 4 | 8 | DP I&Q | Yes | $2 \times 90°$ OH, 4 PD | 4 | High | EQ, $2 \times 2$ MIMO, CR |
| DSP-free DP-QPSK | 4 | 4 | DP I&Q | Yes | $2 \times 90°$ OH, 4 PD | 0 | Very low | None |
| DSP-free DP-DQPSK | 4 | 4 | DP I&Q | Yes | $2 \times 90°$ OH, 4 PD | 0 | Very low | None |
| 4-PAM KK | 1 | 2 | IM | No | 1 PD | 1 | Moderate | SSB filtering, KK-PE, and TD-EQ |
| DP-16-QAM KK | 4 | 8 | DP I&Q | No | 2 PD | 2 | Moderate | SSB filtering, KK-PE, and TD-EQ |

number of ADCs, capability to electronically compensate for CD, and DSP operations required at the receiver.

Noncoherent detection in the form of 4-PAM has lowest complexity, but it cannot easily scale beyond 100 Gbit/s due to the limited degrees of freedom and spectral efficiency. DSP-based coherent schemes provide significant CD compensation capabilities but can be power-hungry due to their high-speed electronics. DSP-free coherent solutions have similar, or more, optical complexity, but may offer lower power consumption by removing power-hungry ADCs and DSP. KK receivers simplify the complexity of receiver optics but require fairly complex DSP to extract the complex-valued signal from the intensity waveform, which is sampled at at least twice the bandwidth of the optical signal. The additional requirements of transmitting a carrier signal and using narrow optical filters further complicates the scheme. Transmitting over a second polarization further increases the complexity since it generally uses an LO, although it does not require implementing a 90-degree optical hybrid.

The power consumption of these schemes ultimately dictates their suitability for intra- and inter-data center applications. 4-PAM transceivers achieving a net bit rate of 400 Gb/s are currently available in a quad small form factor pluggable double-density (QSFP-DD) with a power consumption of about 8 W [46]. These typically allow for a reach of up to 10 km, compatible with intra-data center links. For inter-data center links up to 100 km, DSP-based coherent transceivers in a QSFP-DD form factor use both polarizations and 16-QAM to transmit a net bit rate of 400 Gb/s with a power consumption around 15 W [47] using 7 nm-based CMOS DSP.

The DSP-free coherent detection methods described in Section III could provide a significant power reduction. The estimated power consumption of a two-lane, dual-polarization EPLL-based analog coherent transceiver operating at 56 Gbaud using two wavelengths, resulting in a net bit rate of 400 Gb/s, is approximately 8 W [15], and this number could be lower if adapted for dual-polarization 16-QAM. This may allow a path to higher-bit-rate coherent transceivers for intra-data center applications. The "coherent-lite" scheme can also provide significant power reduction by avoiding carrier recovery, with an estimated 4 W [3] of power consumption at 400 Gb/s. However, it requires transmitting an unmodulated carrier over a second fiber, which may limit its applications. These methods could prove to be useful for scaling intra-data center applications that are extremely sensitive to power consumption, especially if newer CMOS nodes are too expensive or do not provide sufficient power efficiency to scale DSP-based coherent schemes.

While KK receivers allow simpler receiver architectures and CD compensation, their power consumption is similar to DSP-based coherent [6]. Along with their complexity and performance penalty versus DSP-based coherent transmission, this may hinder their adoption for inter-data center links. For intra-data center links, SVR or KK have not yet demonstrated lower power consumption as compared to 4-PAM. Furthermore, since intra-data center links typically do not require CD compensation, SVR and KK will not provide sufficient benefit over alternatives unless they can achieve significantly lower power consumption.

Given these considerations, it is likely that that for the next few years, low-power direct detection of OOK and 4-PAM will

continue to dominate the shortest links ($< 2$ km) within data centers. At the other extreme, links beyond 40 km will continue to rely on DSP-based coherent detection, as it offers the highest receiver sensitivity, highest throughput, and it is more robust to transmission impairments. The intermediate distances from 2 km to 40 km still require a low-power alternative that enables more degrees of freedom than direct detection, while improving receiver sensitivity. So far, DSP-free coherent detection is the detection method that best meets these requirements. DSP-based coherent detection might become attractive over those distances is reduced by innovative designs and CMOS technology improvements.

## V. Conclusion

Increase in traffic within data centers, as well as between data centers, will demand higher per-wavelength bit rates. Noncoherent detection can meet these needs in the short-term, but more degrees of freedom are needed to support higher per-wavelength bit rates. Coherent detection methods enable up to four degrees of freedom, and can improve receiver sensitivity by using a strong LO laser. However, conventional DSP-based coherent receivers designed for long-haul transmission, which prioritizes performance, are suboptimal for data center applications, which prioritize cost and power consumption. By reducing receiver complexity and making system performance tradeoffs, the power consumption of coherent links can be made low enough for intra- and inter-data center applications. Following this philosophy, LO-based DSP-free coherent receivers seem particularly promising for intra-data and inter-data center links, whereas amplified inter-data center links could also support LO-free differentially coherent receivers.

Despite the advantages of coherent detection over the alternatives, coherent detection will likely only gain ground in data center applications once the current strategy of massive parallelization (many fibers carrying noncoherent formats) is no longer economically viable or scalable.

## References


[1] N. Nambath, R. K. Raveendranath, D. Banerjee, A. Sharma, A. Sankar, and S. Gupta, "Analog domain signal processing-based low-power 100-Gb/s DP-QPSK receiver," *J. Lightw. Technol.*, vol. 33, no. 15, pp. 3189–3197, Aug. 2015.

[2] J. Krause Perin, A. Shastri, and J. Kahn, "Design of low-power DSP-Free coherent receivers for data center links," *J. Lightw. Technol.*, vol. 35, no. 21, pp. 4650–4662, Nov. 2017.

[3] M. Morsy-Osman *et al.*, "Dsp-free 'coherent-lite' transceiver for next generation single wavelength optical intra-datacenter interconnects," *Opt. Express*, vol. 26, no. 7, pp. 8890–8903, Apr. 2018.

[4] N. Nambath *et al.*, "All-analog adaptive equalizer for coherent data center interconnects," *J. Lightw. Technol.*, vol. 38, no. 21, pp. 5867–5874, Nov. 2020.

[5] A. Mecozzi, C. Antonelli, and M. Shtaif, "Kramers–Kronig coherent receiver," *Optica*, vol. 3, no. 11, pp. 1220–1227, 2016.

[6] C. Füllner *et al.*, "Complexity analysis of the kramers-kronig receiver," *J. Lightw. Technol.*, vol. 37, no. 17, pp. 4295–4307, Sep. 2019.

[7] E. Ip, A. P. T. Lau, D. J. F. Barros, and J. M. Kahn, "Coherent detection in optical fiber systems," *Opt. Express,* vol. 16, no. 2, pp. 753–791, 2008.

[8] D. Che, A. Li, X. Chen, Q. Hu, Y. Wang, and W. Shieh, "Stokes vector direct detection for short-reach optical communication," *Opt. Lett.*, vol. 39, no. 11, pp. 3110–3113, 2014.

[9] M. Morsy-Osman, M. Chagnon, M. Poulin, S. Lessard, and D. V. Plant, "224-Gb/s 10-km transmission of PDM PAM-4 at 1.3 um using a single intensity-modulated laser and a direct-detection MIMO DSP-based receiver," *J. Lightw. Technol.*, vol. 33, no. 7, pp. 1417–1424, Apr. 2015.

[10] M. Chagnon, M. Morsy-Osman, D. Patel, V. Veerasubramanian, A. Samani, and D. Plant, "Digital signal processing for dual-polarization intensity and interpolarization phase modulation formats using stokes detection," *J. Lightw. Technol.*, vol. 34, no. 1, pp. 188–195, Jan. 2016.

[11] M. Morsy-Osman, M. Chagnon, and D. V. Plant, "Four-dimensional modulation and stokes direct detection of polarization division multiplexed intensities, inter polarization phase and inter polarization differential phase," *J. Lightw. Technol.,* vol. 34, no. 7, pp. 1585–1592, Apr. 2016.

[12] G. P. Agrawal, *Fiber-Optic Communication Systems*. Hoboken, NJ, USA: Wiley, 2002.

[13] E. Ip and J. M. Kahn, "Digital equalization of chromatic dispersion and polarization mode dispersion," *J. Lightw. Technol.,* vol. 25, no. 8, pp. 2033–2043, Aug. 2007.

[14] B. Buscaino, B. D. Taylor, and J. M. Kahn, "Multi-tb/s-per-fiber coherent co-packaged optical interfaces for data center switches," *J. Lightw. Technol.*, vol. 37, no. 13, pp. 3401–3412, Jul. 2019.

[15] J. K. Perin, A. Shastri, and J. M. Kahn, "Data center links beyond 100 gbit/s per wavelength," *Opt. Fiber Technol.*, vol. 44, pp. 69–85, Aug. 2018.

[16] J. L. Wei, J. D. Ingham, D. G. Cunningham, R. V. Penty and I. H. White, "Performance and power dissipation comparisons between 28 gb / s NRZ, PAM, CAP and communication applications," *J. Lightw. Technol.*, vol. 30, no. 20, pp. 3273–3280, Oct. 2012.

[17] J. K. Perin, M. Sharif, and J. M. Kahn, "Modulation schemes for single-wavelength 100 gbit/s links: Multicarrier," *J. Lightw. Technol.*, vol. 33, no. 24, pp. 5122–5132, Dec. 2015.

[18] J. Armstrong and B. J. C. Schmidt, "Comparison of asymmetrically clipped optical OFDM and DC-biased optical OFDM in AWGN," *IEEE Commun. Lett.*, vol. 12, no. 5, pp. 343–345, May 2008.

[19] J. K. Perin, M. Sharif, and J. M. Kahn, "Sensitivity improvement in 100 gbit/s-per- wavelength links using semiconductor optical amplifiers or avalanche photodiodes," *J. Lightw. Technol.*, vol. 34, no. 33, pp. 5542–5553, Dec. 2016.

[20] J. McNicol, M. O'Sullivan, K. Roberts, A. Comeau, D. McGhan, and L. Strawczynski, "Electrical domain compensation of optical dispersion," OFC/NFOEC *Tech. Digest. Optical Fiber Commun. Conf.,* vol. 4, pp. 1–3, 2005.

[21] Q. Zhang, N. Stojanovic, X. Changsong, C. Prodaniuc, and P. Laskowski, "Transmission of single lane 128 gbit/s PAM-4 signals over an 80 km SSMF link, enabled by DDMZM aided dispersion pre-compensation," *Opt. Express,* vol. 24, no. 21, pp. 714–716, 2016.

[22] H. Keangpo and J. Kahn, "Multilevel optical signals optmized for systems having signal-dependent noises, finite transmitter extinction ratio and intersymbol interference," U.S. Patent, vol. 2, no. 12, 2004.

[23] K. Matsumoto, Y. Yoshida, A. Maruta, A. Kanno, N. Yamamoto, and K. I. Kitayama, "On the impact of Tomlinson-Harashima precoding in optical PAM transmissions for intra-DCN communication," in *Proc. Opt. Fiber Commun. Conf. Exhib.* (OFC), Mar. 2017, pp. 1–3.

[24] R. Rath, D. Clausen, S. Ohlendorf, S. Pachnicke, and W. Rosenkranz, "Tomlinson–Harashima precoding for dispersion uncompensated PAM-4 transmission with direct-detection," *J. Lightw. Technol.*, vol. 35, no. 18, pp. 3909–3917, Sep. 2017.

[25] J. Lee, N. Kaneda, and Y. K. Chen, "112-gbit/s intensity-modulated direct-detect vestigial-sideband PAM4 transmission over an 80-km SSMF link," in *Proc*. 42nd *Eur. Conf. Opt. Commun.*, Sep. 2016, pp. 1–3.

[26] D. Pilori, C. Fludger, and R. Gaudino, "Comparing DMT variants in medium-reach 100 G optically amplified systems," *J. Lightw. Technol.*, vol. 34, no. 14, pp. 3389–3399, Jul. 2016.

[27] H. Kim and P. J. Winzer, "Robustness to laser frequency offset in direct-detection DPSK and DQPSK systems," *J. Lightw. Technol.*, vol. 21, no. 9, pp. 1887–1891, Sep. 2003.

[28] R. F. Pawula, S. O. Rice, and J. H. Roberts, "Distribution of the phase angle between two vectors perturbed by gaussian noise," *IEEE Trans. Commun.*, vol. 30, no. 8, pp. 1828–1841, Aug. 1982, doi: 10.1109/TCOM.1982.1095662.

[29] C. R. Doerr, N. K. Fontaine, and L. L. Buhl, "PDM-DQPSK silicon receiver with integrated monitor and minimum of controls," *IEEE Photon. Technol. Lett.*, vol. 24, no. 8, pp. 697–699, 2012.

[30] B. S. G. Pillai *et al.*, "End-to-end energy modeling and analysis of long-haul coherent transmission systems," *J. Lightw. Technol.*, vol. 32, no. 18, pp. 3093–3111, Sep. 2014.

[31] C. Martins *et al.*, "Distributive FIR-Based chromatic dispersion equalization for coherent receivers," *J. Lightw. Technol.*, vol. 34, no. 21, pp. 5023–5032, Nov. 2016.

[32] J. Kahn, A. Gnauck, J. Veselka, and S. Korotky, "4-Gb/s PSK homodyne transmission system using phase-locked semiconductor lasers," *IEEE Photon. Technol. Lett.*, vol. 2, no. 4, pp. 285–287, Apr. 1990.

[33] C. F. Liao and S. I. Liu, "40 Gb/s transimpedance-AGC amplifier and CDR circuit for broadband data receivers in 90 nm CMOS," *IEEE J. Solid-State Circuits*, vol. 43, no. 3, pp. 642–655, Mar. 2008.

[34] R. Noe, H. Heidrich, and D. Hoffmann, "Endless polarization control systems for coherent optics," *J. Lightw. Technol.*, vol. 6, no. 7, pp. 1199–1208, Jul. 1988.

[35] H. Bulow *et al.*, "Measurement of the maximum speed of PMD fluctuation in installed field fiber," in *Proc. OFC/IOOC, Tech. Digest. Opt. Fiber Commun. Conf., 1999, Int. Conf. Integr. Opt. Opti. Fiber Commun.*, 1999, vol. 2, pp. 83–85.

[36] H.-C. Park, M. Lu, E. Bloch, T. Reed, Z. Griffith, and L. Johansson, "40 gbit/s coherent optical receiver using a costas loop," *Opt. Express*, vol. 20, no. 26, pp. B197–B203, 2012, Art. no. 7.

[37] H. R. Rideout, J. S. Seregelyi, S. Paquet, and J. Yao, "Discriminator-aided optical phase-lock loop incorporating a frequency down-conversion module," *IEEE Photon. Technol. Lett.*, vol. 18, no. 22, pp. 2344–2346, Nov. 2006.

[38] N. Nambath, A. Gupta, and S. Gupta, "A low power 100 gbps DP-QPSK receiver using analog domain signal processing," in *Proc. Int. Conf. Comput., Netw. Commun.*, 2013, pp. 470–473 .

[39] Y. Zhu, K. Zou, X. Ruan, and F. Zhang, "Single carrier 400 g transmission with single-ended heterodyne detection," *IEEE Photon. Technol. Lett.*, vol. 29, no. 21, pp. 1788–1791, Nov. 2017.

[40] X. Chen, *et al.*, "Single-wavelength, single-polarization, single- photodiode Kramers–Kronig detection of 440-Gb/s entropy-loaded discrete multitone modulation transmitted over 100-km SSMF," in *Proc. IEEE Photon. Conf.*, 2017, pp. 1–2 .

[41] X. Chen *et al.*, "Kramers–Kronig receivers for 100-km datacenter interconnects," *J. Lightw. Technol.*, vol. 36, no. 1, pp. 79–89, Jan. 2018.

[42] S. Fan *et al.*, "264 Gb/s Twin-SSB-KK direct detection transmission enabled by MIMO processing," in *Proc. Opt. Fiber Commun. Conf. Expo. (OFC)*, 2018, pp. 1–3.

[43] Z. Li *et al.*, "Spectrally efficient 168 Gb/s/WDM 64-QAM single-sideband Nyquist-subcarrier modulation with Kramers–Kronig direct-detection receivers," *J. Lightw. Technol.*, vol. 36, no. 6, pp. 1340–1346, Mar. 2018.

[44] L. Shu *et al.*, "Single-lane 112-gbit/s SSB-PAM4 transmission with dual-drive MZM and Kramers–Kronig detection over 80-km SSMF," *IEEE Photon. J.*, vol. 9, no. 6, pp. 1–9, Dec. 2017.

[45] Y. Zhu *et al.*, "200 Gb/s twin-SSB Nyquist subcarrier modulation WDM transmission over 160 km SSMF with direct detection," in *Proc. Opt. Fiber Commun. Conf.*, 2017, pp. 1–3.

[46] "Eoptolink samples the lowest Power 400 g DR4/FR4 transceivers powered by broadcom's 7 nm pam-4 optical platform for hyper-scale data center and cloud networks," 2019. [Online]. Available: https://www.ofcconference.org/en-us/home/news-and-press/exhibitor-press-releases/eoptolink-samples-the-lowest-power-400g-dr4-fr4-tr/

[47] "400 g coherent transceiver DD-QSFP-DCO," 2020. [Online]. Available: https://www.neophotonics.com/products/400g-coherent-transceiver-dd-qsfp-dco/